Features

- Instrument connection:
  thread M14x1.5, M18x1.5, M20x1.5, G1/2" or others
- Total lenghts L:
  110 mm,140 mm, 170 mm, 200 mm, 260 mm, 410 mm
  or acc. to customer's specification
- Maximal process pressure and temperature
  depends on thermowell dimension and material[1)]
- Drilled hole diameters:
  Ø3.5 mm, Ø7 mm, Ø9 mm
- Thermowell materials:
  1.4401 (AISI316), 1.4404 (AISI316L)
  1.4541 (AISI321), 1.4571 (AISI316Ti)
  1.5415 (16Mo3), 1.7335 (15HM)
  1.7380 (10H2M)

Options

- Certificate 3.1 acc. to EN 10204
- PMI test
- Designation with individual serial number
- Other materials, threads and dimensions
- Protective coatings: PFA, silicon carbide or others

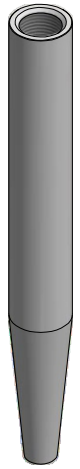

Drilled thermowell
Type D
DIN 43772
(form 4)

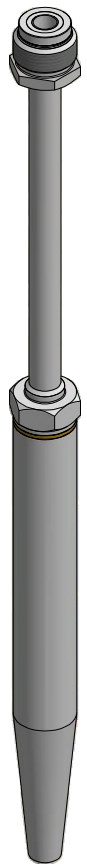

Drilled thermowell
Type D
with neck extension
Type EDO

Description

Thermowells are use to separate sensor from process environment. They are designed to work with high process loads such as high pressure and flow rates. Drilled (solid machined) thermowells type D are mainly use in energy and petrochemical industries.

Rating depends on the parameters below:
- Process medium
- Process pressure and temperature
- Flow rate
- Design of thermowell (dimensions, material)

Protective coatings

Additional protective coatings are commonly used in applications where resistance to abrasion, corrosion or erosion is critical.

This solution is also an alternative to expensive materials - it allows to lower production costs compared to thermowells made entirely of desired material. Coat can be applied for example to standard stainless steel AISI316L (1.4404).

Termoaparatura Wrocław offers following protective coating materials:

- Teflon® PTFE/PFA
- Stellit®
- Hard chrome
- Silicon carbide SiC
- Aluminum oxide

Type **D**

Wake frequency calculations in accordance with ASME PTC 19.3 are recommended in critical applications. TERMOAPARATURA offer this as an engineering service.

Solid machined drilled thermowells dimensions acc. to DIN 43772 - form 4

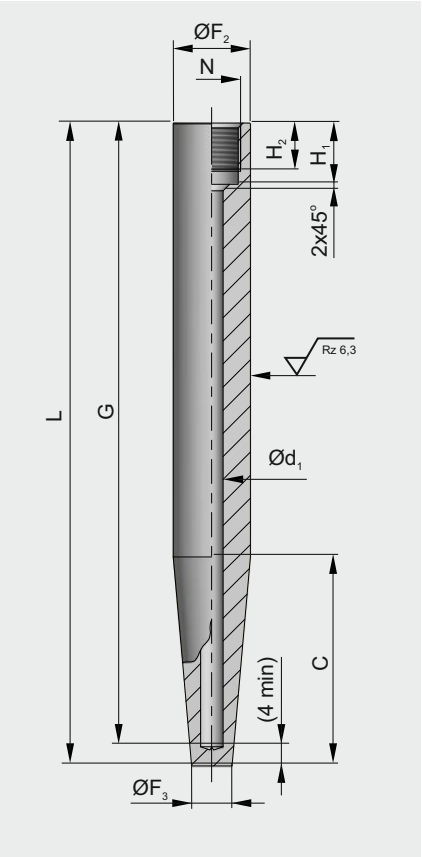

Standard diameters and threads type

d_1	F_2	N	F_3	H_1	H_2
3,5	18h7	M14x1,5	9	16	13
7	24h7	M18x1,5	12,5	19	15
	26h7	G1/2" (M20x1,5) (1/2"NPT)			
9			15		
11	32h11	G3/4" (M27x2) (3/4"NPT)	17	22	17
13			19		
14			20		

Standard lengths

L^{+2}_{0}	G^{+1}_{0}	C^{+2}_{0}
110	105	65
110	105	73
140	135	65
170	165	133
200	195	65
200	195	125
260	255	125
410	405	275

Adaptors for weld-in

Type T4

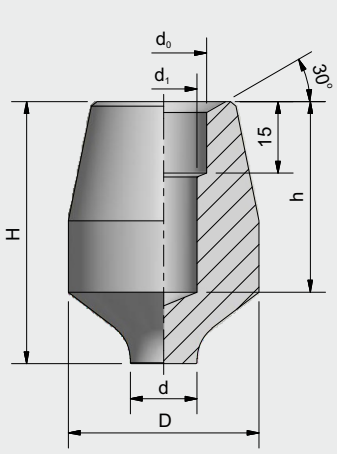

Type T5

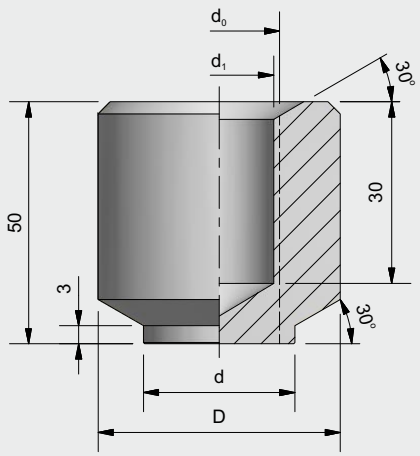

More detailed information are available in the „Adaptors for weld-in" data sheet.

TERMOAPARATURA.COM.PL • tel. +48 71 311-58-60

Materials

DIN material number designation	DIN	PN
1.5415	16Mo3	16Mo
1.7335	13CrMo4-5	15HM
1.7380	10CrMo9-10	10H2M
1.4571	X6CrNiMoTi17-12-2	H17N13M2T

Material	Maximal temperature	Material properties	Applications
1.5415	530°C	High resistance in water vapor environment. Perfect for applications that requires high pressure resistance. Very well weldable material.	Industrial boilers and furnaces, pressure tanks, heat exchangers, chemical industry.
1.7335	560°C	Good welded properties, does not require special preliminary heat treatment. Increased resistance to hydrogen and water vapor environment. Resistant up to 560°C.	Power and chemical industry, tank and boiler construction.
1.7380	590°C	Good welded properties. Increased resistance to hydrogen and water vapor environment. Resistant up to 590°C.	Power and chemical industry, boiler construction and pressure vessels.
1.4571	800°C	High resistance to intercrystalline corrosion after welding. Good resistance to heavy oils, steam and exhaust gases. High resistance to oxidation. Can be used continuously up to approximately 800°C. Can be use as an alternative to steel 1.4404.	Nuclear power and reactor construction, chemical apparatus engineering, annealing furnaces, heat exchangers, petrochemical and crude oil industry, food processing industry.

Load charts for selected dimensions and material types of drilled thermowells acc. to DIN 43772

Parameters and material types for load charts selected as an example.

Form	curve	C	$ØF_2$	$Ød_1$	Material
4	a	65	18	3,5	1.4571 1.5415
	b	125	24	7	1.7335 1.7380
	c		26	11	1.4571
	d		32	14	

NOTES: Designation from a to d are only use for load charts purpose

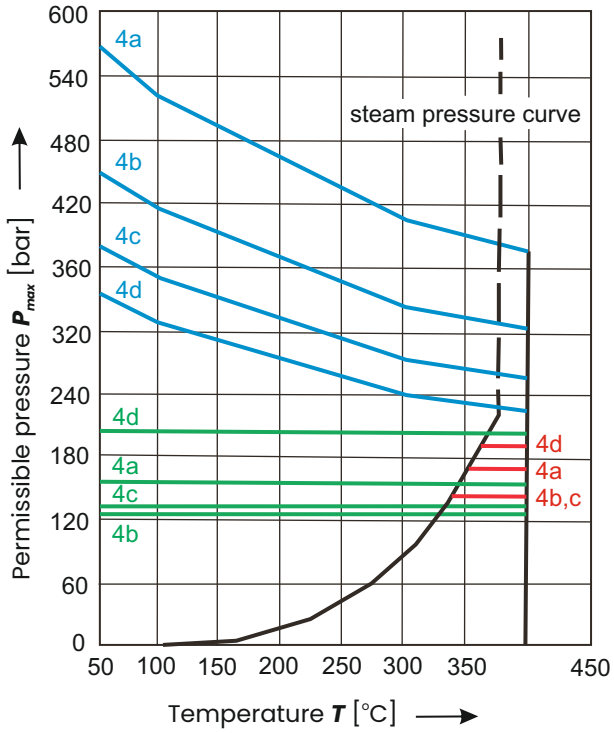

Chart 1:
Permissible loads for drilled thermowell type D form 4 for material: **1.4571**

Values for water flow 5 m/s

Values for air flow 60 m/s

Values for steam flow 60 m/s

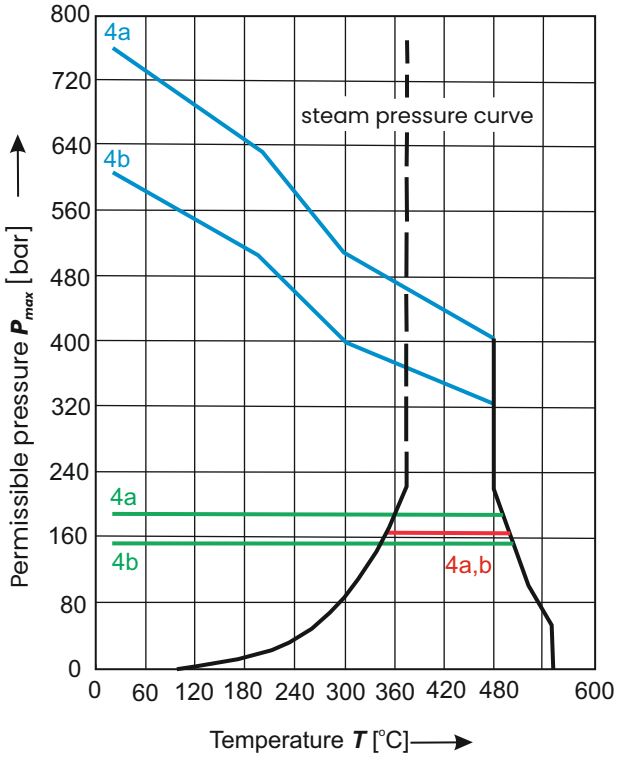

Chart 2:
Permissible loads for drilled thermowell type D form 4 for material: **1.5415**

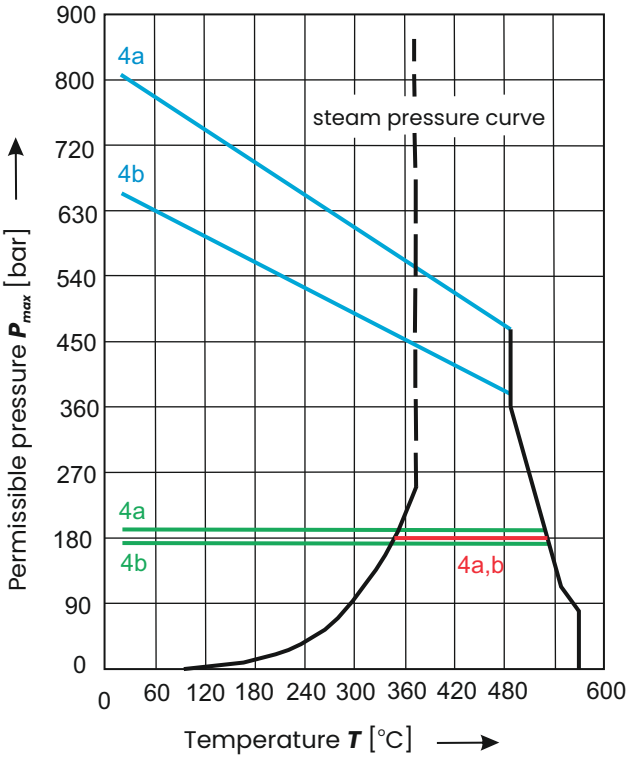

Chart 3:
Permissible loads for drilled thermowell type D form 4 for material: **1.7335** i **1.7380**

Ordering code

	1		2		3		4		5
D –	☐	-	☐	-	☐	-	☐	-	☐

Design

1	18	drilled thermowell, Ø18h7
	24	drilled thermowell, Ø24h7
	26	drilled thermowell, Ø26h7
	32	drilled thermowell, Ø32h11

Length L

2	110	110 mm
	140	140 mm
	170	170 mm
	200	200 mm
	260	260 mm
	410	410 mm
	xxx	other, please specify

Length C

3	65	65 mm
	73	73 mm
	125	125 mm
	133	133 mm
	275	275 mm
	xxx	other, please specify

Instrument connection N

4	M12x1.5	metric thread M12x1.5
	M14x1.5	metric thread M14x1.5
	M18x1.5	metric thread M18x1.5
	M20x1.5	metric thread M20x1.5
	G1/2"	inch thread G1/2"
	1/2"NPT	tapered inch thread 1/2"NPT
	xxx	other, please specify

Thermowell material

5	1.5415	steel 1.5415 (16Mo3)
	1.7335	steel 1.7335 (13CrMo4-5, 15HM)
	1.7380	steel 1.7380 (10CrMo9-10, 10H2M)
	1.4571	stainless steel 1.4571 (X6CrNiMoTi17-12-2)
	xxx	other, please specify